NOT MEASUREMENT SENSITIVE

MIL-STD-188-176
21 May 1996

DEPARTMENT OF DEFENSE

INTERFACE STANDARD

STANDARDIZED PROFILE

FOR

ASYNCHRONOUS TRANSFER MODE (ATM)

AMSC N/A

AREA TCSS

FOREWORD

1. This standard is approved for use by all Departments and Agencies of the Department of Defense (DoD).

2. In accordance with DoD Instruction 4630.8, it is DoD policy that all forces for joint and combined operations be supported through compatible, interoperable, and integrated command, control, communications, and intelligence (C3I) systems. Furthermore, all C3I systems developed for use by U.S. forces are considered to be for joint use. The Director of the Defense Information Systems Agency (DISA) serves as DoD's single point of contact for developing information technology standards to achieve interoperability and compatibility. All C3I systems and equipment shall conform to technical and procedural standards for compatibility, as recommended by DISA.

3. MIL-STDs in the 188 series (MIL-STD-188-XXX) address telecommunication design parameters based on mature technologies. These MIL-STDs are to be used in all new DoD systems and equipment, or major upgrades thereto, to ensure interoperability. The MIL-STD-188 series is subdivided into a MIL-STD-188-100 series, covering common standards for tactical and long-haul communications; a MIL-STD-188-200 series, covering standards for tactical communications only; and a MIL-STD-300 series, covering standards for long-haul communications only. Emphasis is being placed on the development of common standards for tactical and long-haul communications (the MIL-STD-188-100 series). The MIL-STD-188 series may be based on, or make reference to, American National Standards Institute (ANSI) standards, International Telecommunications Union - Telecommunication Standardization Sector (ITU-T) recommendations, International Organization for Standardization (ISO) standards, North Atlantic Treaty Organization (NATO) standardization agreements (STANAG), and other standards wherever applicable.

4. This MIL-STD is a profile of standards and other documents pertaining to asynchronous transfer mode (ATM) products and services. It is a selection of base standards and identifies chosen classes, subsets, options, and parameters from those base documents. This MIL-STD defines a common set of specifications to facilitate interoperability among products developed by different vendors. By using this MIL-STD in the acquisition process, DoD activities can obtain ATM products and services that interoperate across Activity, Service, and Agency boundaries.

5. Users of this MIL-STD should be aware that it is based, at least in part, on commercial standards and that there may be patent rights, copyright claims, or both, by companies or individuals on portions of the MIL-STD. Before incorporating

this MIL-STD into systems or equipment, users are advised to contact the appropriate standards organization, such as ANSI, regarding claims or conditions that pertain to the use of an applicable commercial standard. Implementers of this MIL-STD are solely responsible for compensating companies or individuals entitled to any royalties.

6. Beneficial comments (recommendations, additions, deletions) and any pertinent data that may be of use in improving this document should be addressed to:

Defense Information Systems Agency
Joint Interoperability and Engineering Organization
ATTN: JEBBB
Fort Monmouth, NJ 07703-5613

by using the Standardization Document Improvement Proposal (DD Form 1426) appearing at the end of this document, or by letter.

(This page intentionally left blank)

CONTENTS

PARAGRAPH		PAGE
1.	SCOPE	1
1.1	Purpose	1
1.2	Applicability	1
1.3	Objective	1
1.4	Revisions	1
1.5	Interoperability	1
2.	APPLICABLE DOCUMENTS	3
2.1	General	3
2.2	Government documents	3
2.2.1	Specifications, standards, and handbooks	3
2.2.2	Other Government documents, drawings, and publications	4
2.3	Non-Government publications	4
2.3.1	ANSI standards	4
2.3.2	Bellcore Technical References	5
2.3.3	ITU-T Recommendations	5
2.3.4	ATM Forum (AF) specifications	6
2.3.5	Internet Engineering Task Force requests for comment (RFC)	7
2.3.6	Frame Relay Forum Implementation Agreements	7
2.3.7	SMDS Interest Group (SIG)	8
2.4	Order of precedence	8
3.	DEFINITIONS	9
3.1	Terms	9
3.2	Abbreviations and acronyms	10
4.	GENERAL REQUIREMENTS	13
4.1	General	13
4.2	Asynchronous transfer mode	13
4.2.1	Cell format	13
4.2.2	User-to-network interface (UNI)	13
4.2.2.1	ATM subscriber-network elements	14
4.2.2.2	Non-ATM end systems	14
4.2.3	Network-to-node interface (NNI)	16
4.2.4	Private network-to-node interface (P-NNI)	16
4.2.5	B-ISDN protocol reference model	16
4.2.5.1	Planes structure	16
4.2.5.1.1	User plane	16
4.2.5.1.2	Control plane	17
4.2.5.1.3	Management plane	17
4.2.5.1.3.1	Plane management	17
4.2.5.1.3.2	Layer management	17
4.2.5.2	Layered structure	17
4.2.5.2.1	Higher layers	17

CONTENTS

PARAGRAPH		PAGE
4.2.5.2.2	ATM adaptation layer	18
4.2.5.2.3	ATM layer	18
4.2.5.2.4	Physical layer	18
4.2.6	Virtual channel connections	18
4.2.7	Signaling capabilities	18
4.2.7.1	Point-to-point communications	18
4.2.7.2	Point-to-multipoint communications	19
4.3	Interworking	19
4.4	ATM network management	19
4.4.1	Telecommunications management network	20
4.4.1.1	ATM network management architecture	20
4.4.1.2	TMN network information models	21
4.4.2	Base ATM network management	21
5.	DETAILED REQUIREMENTS	23
5.1	ATM user-to-network interface	23
5.1.1	Physical layer	23
5.1.1.1	SONET STS-3c physical layer interface	23
5.1.1.1.1	TC sublayer for SONET STS-3c	23
5.1.1.1.2	PMD sublayer for SONET STS-3c	23
5.1.1.1.2.1	SONET-based STS-3c optical interface	23
5.1.1.1.2.2	SONET-based STS-3c unshielded twisted pair (UTP-5) interface	26
5.1.1.1.2.3	SONET-based STS-3c shielded twisted pair (STP) interface	26
5.1.1.2	Fiber channel, 155-Mbps physical layer interface	26
5.1.1.2.1	Fiber channel, TC sublayer for 155-Mbps interface	26
5.1.1.2.2	Fiber channel, PMD sublayer for 155-Mbps interface	26
5.1.1.2.2.1	Optical interface	26
5.1.1.2.2.2	Shielded twisted pair (STP) interface	26
5.1.1.3	100-Mbps physical layer interface (optical)	26
5.1.1.3.1	TC sublayer for 100-Mbps interface	26
5.1.1.3.2	PMD sublayer for 100-Mbps interface	26
5.1.1.4	SONET-based STS-1 physical layer interface (UTP-3)	27
5.1.1.4.1	TC sublayer for SONET-based STS-1 interface	27
5.1.1.4.2	PMD sublayer for SONET-based STS-1 interface	27
5.1.1.5	DS-3 Direct Mapped physical layer interface (coaxial)	27
5.1.1.5.1	TC sublayer for DS-3 Direct Mapped interface	27
5.1.1.5.2	PMD sublayer for DS-3 Direct Mapped interface	27
5.1.1.6	E-1 physical layer interface	27
5.1.1.6.1	TC sublayer for E-1 interface	27

CONTENTS

PARAGRAPH		PAGE
5.1.1.6.2	PMD sublayer for E-1 interface	27
5.1.1.7	DS-1 physical layer interface	28
5.1.1.7.1	TC sublayer for DS1 interface	28
5.1.1.7.2	PMD sublayer for DS1 interface	28
5.1.1.8	Satellite physical layer interface	28
5.1.2	ATM layer	28
5.1.2.1	ATM cell structure and encoding at UNI	28
5.1.2.2	ATM layer functions	28
5.1.2.3	ATM layer management functions	28
5.1.2.4	Preassigned header field values	29
5.1.2.5	Traffic control and congestion control	29
5.1.3	Signaling ATM Adaptation Layer (SAAL)	29
5.1.4	UNI signaling	29
5.1.4.1	Connection control	29
5.1.4.2	Addressing	29
5.2	ATM adaptation layer (AAL)	29
5.2.1	AAL 1	30
5.2.2	AAL 2	30
5.2.3	AAL 3/4	30
5.2.3.1	AAL 3/4 functions and structure	31
5.2.3.2	AAL 3/4 procedures	31
5.2.4	AAL 5	31
5.3	ATM wide area network (WAN)	31
5.3.1	Physical layer	31
5.3.2	ATM layer	31
5.3.2.1	ATM cell header format and encoding at NNI	32
5.3.2.2	ATM layer functions	32
5.3.2.3	ATM layer management functions	32
5.3.3	SAAL at the NNI	32
5.3.4	ATM network layer	32
5.4	Base ATM network	32
5.5	Interworking	33
5.5.1	Interworking with non-ATM end-systems	33
5.5.2	Interworking with non-ATM networks	33
5.5.2.1	Narrowband ISDN	33
5.5.2.2	Frame relay networks	38
5.5.2.3	Internet protocol (IP) router subnetworks	38
5.5.2.4	Switched multi-megabit data service	38
5.6	Base network management	38
5.6.1	Interim local management interface	41
5.6.2	Transaction-oriented application	41
6.	NOTES	43
6.1	Key-word listing	43
	CONCLUDING MATERIAL	45

CONTENTS

FIGURE		PAGE
1	ATM UNI and Non-ATM Interface	14
2	Examples of ATM UNIs and Non-ATM Interfaces	15
3	Base ATM Network	16
4	B-ISDN Protocol Reference Model	17
5	Point-to-Point Communications	19
6	Unidirectional Point-to-Multipoint Communications	20
7	Profile of ATM Base Standards	24
8	ATM UNI and ATM NNI	25
9	Protocol Model: Control Plane for Base ATM Networks	33
10	Interworking with Non-ATM End Systems	34
11	Non-ATM End Systems Interworking Across ATM Networks	35
12	Interworking with Non-ATM Networks	36
13	N-ISDN Interworking	37
14	Frame Relay Interworking	39
15	Example of IP Router Interworking: User Plane	40
16	SMDS Interworking	40

TABLE		
I	SONET/SDH Signal Hierarchy	32

1. SCOPE

1.1 Purpose. The purpose of this military standard (MIL-STD) is to provide a profile of applicable standards to be used by all Department of Defense (DoD) activities and associated organizations when acquiring asynchronous transfer mode (ATM) products, systems, or services.

1.2 Applicability. This MIL-STD is to be used by acquisition authorities when procuring ATM products, systems, or services.

1.3 Objective. The objective of this MIL-STD is to provide a list of applicable ATM documents that promote interoperability between and among commercial-off-the-shelf (COTS) ATM products, systems, and services. The ATM standards selected are based on the following priority order (highest priority first): implementation agreements reached by the ATM Forum, American National Standards Institute (ANSI) standards, International Telecommunications Union - Telecommunication Standardization Sector (ITU-T) [formerly the International Telephone and Telegraph Consultative Committee (CCITT)] recommendations, International Standardization Organization (ISO) standards, and MIL-STDs that address military-unique requirements. Should a conflict occur, the conflict should be resolved using the priority order stated.

1.4 Revisions. Due to the dynamic nature of ATM technology, this MIL-STD will be a living document and will be updated to reflect developments of new commercial standards, as necessary. Mature draft documents will be referenced where approved documents are not available and considered as design objectives until such time as they become final and are entered in the next update period.

1.5 Interoperability. Interoperability of DoD telecommunication systems, and of DoD with non-DoD telecommunication systems, has been and will continue to be a major consideration in developing and adopting standards for military use. This MIL-STD adopts specific commercial ATM standards and design parameters that have been proven to work. ATM supports end-to-end digital networks and merges voice and data communications into a common format. This MIL-STD, a standardized profile, is to be used in all new or major upgrades of inter- and intra-DoD ATM systems and equipment to facilitate interoperability.

(This page intentionally left blank)

2. APPLICABLE DOCUMENTS

2.1 General. The documents listed in this section are specified in sections 3, 4, and 5 of this standard. This section does not include documents cited in other sections of this standard or recommended for additional information or as examples. While every effort has been made to ensure the completeness of this list, document users are cautioned that they must meet all specified requirements documents cited in sections 3, 4, and 5 of this standard, whether or not they are listed.

2.2 Government documents

2.2.1 Specifications, standards, and handbooks. The following specifications, standards, and handbooks form a part of this document to the extent specified herein. Unless otherwise specified, the issues of these documents are those listed in the Department of Defense Index of Specifications and Standards (DoDISS) and supplements thereto, cited in the solicitation.

STANDARDS

FEDERAL

FED-STD-1037	*Glossary of Telecommunication Terms*
FIPS-PUB-179	*Government Network Management Profile (GNMP)*

(FIPS PUBS are available from the Standardization Document Order Desk to DoD requesters. Contractors must purchase FIPS PUBS from the National Technical Information Service.)

DEPARTMENT OF DEFENSE

MIL-STD-187-700	*Interoperability and Performance Standards for the Defense Information System*

HANDBOOKS

DEPARTMENT OF DEFENSE

MIL-HDBK-1351	*Network Management for DoD Communications*

(Unless otherwise indicated, copies of the above specifications, standards, and handbooks are available from the

Standardization Document Order Desk, 700 Robbins Avenue, Building 4D, Philadelphia, PA 19111-5094.)

2.2.2 Other Government documents, drawings, and publications . The following other Government documents, drawings, and publications form a part of this document to the extent specified herein. Unless otherwise specified, the issues are those cited in the solicitation.

DCAC 370-175-13	*Defense Switched Network (DSN) System Interface Criteria*

(Requests for DCAC 370-175-13 should be submitted to the DISA Center for Standards, ATTN: JEBBB, Fort Monmouth, NJ 07703-5613.)

2.3 Non-Government publications . The following documents form a part of this document to the extent specified herein. Unless otherwise specified, the issues of the documents which are DoD adopted are those listed in the issue of the DoDISS cited in the solicitation.

2.3.1 ANSI standards

ANSI T1.102-1993	*Digital Hierarchy - Electrical Interfaces*
ANSI T1.105-1991	*Digital Hierarchy - Optical Interfaces Rates and Specifications (SONET)*
ANSI T1.106-1988	*Digital Hierarchy - Optional Interface Specification (Single Mode)*
ANSI T1.107-1988	*Digital Hierarchy - Formats Specifications*
ANSI T1.107a-1990	*Digital Hierarchy - Supplements to Formats Specifications (DS3 Format Application)*
ANSI T1.113-1988	*Signalling System Number 7 (SS7) -- Integrated Services Digital Network (ISDN) User Part*
ANSI T1.404-1991	*Carrier-to-Customer Installation - DS3 Metallic Interface Specification*
ANSI T1.609-1990	*Interworking Between the ISDN UNI Protocol and the SS7 ISDN User Part*

ANSI T1.627-1993	*Broadband ISDN-ATM Layer Functionality and Specification*
ANSI T1.629-1993	*B-ISDN - ATM Adaptation Layer 3/4 Common Part Functions and Specifications*
ANSI T1.630-1993	*B-ISDN - ATM Adaptation Layer for Constant Bit Rate Services Functionality and Specification*
ANSI T1.637-1994	*B-ISDN ATM Adaptation Layer - Service Specific Connection Oriented Protocol (SSCOP)*
ANSI T1.638-1994	*B-ISDN Signaling ATM Adaptation Layer - Service Specific Coordination Function for Support of Signaling at the User-to-Network Interface (SSCF at the UNI)*
ANSI T1.645-1995	*B-ISDN ATM Adaptation Layer - Service Specific Coordination Function for Support of Signaling at the Network Node Interface (SSCF at the NNI)*

(Requests for copies of ANSI standards should be addressed to the American National Standards Institute, ATTN: Sales Department, 11 West 42nd Street, New York, NY 10036, Phone (212) 642-4900. ANSI standards approved, but not yet published, may be ordered from the Exchange Carriers Standards Association, Inc. (ECSA), 5430 Grosvenor Lane, Bethesda, MD 20814-2122.)

2.3.2 Bellcore Technical References

TR-SSV-000772	*Generic Requirement in Support of Switched Multi-megabit Data Service, May 1991*

(Copies of Bellcore documents may be requested from Bellcore Customer Service, 8 Corporate Place, Piscataway, NJ 08854-4156, telephone 1-800-521-2673.)

2.3.3 ITU-T Recommendations

ITU-T G.703-1988	*Physical/electrical characteristics of hierarchical digital interfaces*

ITU-T G.704-1988	*Synchronous frame structures used at primary and secondary hierarchial interfaces*
ITU-T I.211-1993	*Integrated services digital network (ISDN) general structure and service capabilities, B-ISDN service aspects*
ITU-T I.363-1993	*B-ISDN-ATM adaptation layer 5 common part functions and specification*
ITU-T I.432-1991	*B-ISDN user-network interface physical layer specification*
ITU-T I.610-1995	*B-ISDN Operations and Maintenance Principles and Functions*
ITU-T M.3010	*Principles of Telecommunications Management Network (TMN)*
ITU-T Q.2650-1994	*B-ISDN Interworking between B-ISUP and DSS2*
ITU-T Q.2660-1994	*Interworking between Signaling System No. 7 broadband ISDN user part (B-ISUP) and narrowband ISDN user part (N-ISUP)*
ITU-T Q.2764-1994	*Broadband integrated services digital network (B-ISDN), Signaling System No. 7 B-ISDN user part (B-ISUP) Basic call procedures*
ITU-T Q.2931-1995	*Broadband integrated services digital network (B-ISDN), digital subscriber Signaling System No. 2 (DSS 2). User network interface (UNI) layer 3 specification for basic call/connection control*

[Copies of ITU-T (CCITT) documents may be requested from the National Technical Information Service, 5285 Port Royal Road, Springfield, VA 22161-2171.]

2.3.4 ATM Forum (AF) specifications

AF UNI Specification	*ATM Forum User-Network Interface Specification, Version 3.1* (September 1994)

AF PNNI Signaling	*ATM Forum/95-0221R1, PNNI Signaling*
AF-PHY-0015.000	*ATM Physical Medium Dependent Interface Specification for 155 Mb/s over Twisted Pair Cable* (September 1994)
AF-PHY-0016.000	*DS-1 Physical Layer Interface Specification* (September 1994)
AF-PHY-0018.000	*Mid-range Physical Layer Specification for Category 3 Unshielded Twisted-Pair* (September 1994)
AF-NM-0027.001	*CMIP Specification for the M4 Interface* (September 1995)
AF-SAA-0032.000	*Circuit Emulation Service Interoperability Specification* (September 1995)

[Copies of ATM Forum specifications may be obtained from The ATM Forum, 303 Vintage Park, Foster City, CA 94404-1138, telephone (415) 578-6860, Fax Retrieval (415) 525-0182.]

2.3.5 Internet Engineering Task Force requests for comment (RFC)

RFC 1157	*A Simple Network Management Protocol (SNMP)* (May 1990)
RFC 1577	*Classical IP and ARP over ATM* (January 1994)
RFC 1626	*Default IP MTU for use over ATM AAL 5* (May 1994)

(RFCs are available, free of charge, via e-mail, using this address: mailserv@ds.internic.net. Type "Send RFCnnnn.txt" in the body of the message.)

2.3.6 Frame Relay Forum Implementation Agreements

FRF.5	*Frame Relay/ATM PVC Network Interworking Implementation Agreement* (20 December 1994)
FRF.8	*Frame Relay/ATM PVC Service Interworking Implementation Agreement* (14 April 1995)

[Copies of Frame Relay Forum documents may be obtained from the Frame Relay Forum, 303 Vintage Park, Foster City, CA 94404-1138, telephone (415) 578-6980, Fax Retrieval (415) 525-0182.]

2.3.7 SMDS Interest Group (SIG)

SIG.TWG-008 *Protocol Interface Specification for Implementation of SMDS over an ATM-based Public UNI, Revision 1.0, 3 May 1994*

(Copies of SIG documents may be obtained from SMDS Interest Group Inc., 303 Vintage Park Drive, Foster City, CA 94404-1138.)

2.4 Order of precedence . In the event of a conflict between the text of this document and the references cited herein, the text of this document shall take precedence. Nothing in this document, however, supersedes applicable laws and regulations unless a specific exemption has been obtained.

3. DEFINITIONS

3.1 Terms. Terms not listed below are as defined in FED-STD-1037.

3.1.1 Acquisition authority. An individual or team who, under federal law and acquisition regulations, has the authority to enter into, administer, or terminate a Government contract.

3.1.2 Asynchronous transfer mode (ATM). A transfer mode in which the information is organized into cells. It is asynchronous in the sense that the recurrence of cells containing information from an individual user is not necessarily periodic.

3.1.3 ATM adapter (AA). A device used to allow non-ATM-user equipment to interwork over ATM networks. Typically, AAs are used to make the lower layers of ATM-network elements match the lower layers of non-ATM-network elements.

3.1.4 ATM adaptation layer (AAL). One of the layers of the ATM protocol reference model. It translates incoming data into ATM cell payloads and translates outgoing cells into a format readable by higher layers.

3.1.5 ATM bearer service. The ATM bearer service (also known as cell relay bearer service) provides connection-oriented, sequence-preserving, cell-based communications service between two or more ATM end systems at a variety of access rates and information-transfer rates. The transfer of cells can take place in a bidirectional symmetric or bidirectional asymmetric fashion, either for point-to-point, point-to-multipoint, or multipoint-to-multipoint connections. The service can be provided over permanent (provisioned) connections or over switched (on-demand) connections. A bidirectional asymmetric connection includes one in which the assigned bandwidth in one direction is zero.

3.1.6 ATM end system. A system in which an ATM connection is initiated or terminated.

3.1.7 ATM UNI. A user-to-network interface (UNI) that complies with the ATM Forum's ATM UNI specification. Terminals that comply with this MIL-STD are given ATM bearer service by ATM networks.

3.1.8 Bearer service. A type of telecommunications service that provides the capability to transmit signals between user-network interfaces.

3.1.9 Broadband . A service or system requiring transmission channels to support rates greater than the ISDN primary rate.

3.1.10 Broadband terminal (BT) . User equipment at the location where the user-to-network interface (UNI) terminates. The BT may be a single user equipment or it may act as aggregator of other tributary devices.

3.1.11 Cell. An ATM Layer protocol data unit. A cell consists of a 5-byte header and a 48-byte payload. The primary role of the header is to identify cells that belong to the same connection.

3.1.12 Non-ATM interface . A user-to-network interface that does not comply with the ATM Forum's ATM UNI specification.

3.1.13 Permanent virtual channel connection (PVCC) . A virtual channel that provides a long-term connection between ATM entities.

NOTE: PVCCs are preestablished by network managers and eliminate the need for repeated call setup and release.

3.1.14 Profile . A set of one or more base standards and, where applicable, the identification of chosen classes, subsets, options, and parameters of those base standards necessary for accomplishing a particular function.

3.1.15 Switched virtual channel connection (SVCC) . A virtual channel that is established on a per-call basis between ATM entities and released when the call is completed.

3.1.16 Virtual channel . A communications channel that provides for the sequential unidirectional transport of ATM cells.

3.1.17 Virtual channel connection . A bidirectional connection between ATM end points that provides sequential transport of ATM cells in each direction. The bandwidth is allocated separately in each direction.

3.1.18 Virtual path . A logical association or bundle of virtual channels.

3.2 Abbreviations and acronyms . The abbreviations and acronyms used in this standard are defined as follows:

AA	ATM adapter
AAL	ATM adaptation layer

AF	ATM Forum
ANSI	American National Standards Institute
ATM	asynchronous transfer mode
BCI	bit count integrity
BER	bit error ratio
B-ISDN	broadband integrated services digital network
B-ISUP	broadband-ISDN User Part
BML	business management layer
BT	broadband terminal
C3I	command, control, communications, and intelligence
CBR	constant bit rate
CCITT	International Telegraph and Telephone Consultative Committee (now referred to as ITU-T)
CMIP	common management information protocol
CMIS	common management information service
COTS	commercial off-the-shelf
CP	common part
CPCS	common part convergence sublayer
CRC	cyclic redundancy check
DISA	Defense Information Systems Agency
DoD	Department of Defense
DoDISS	Department of Defense Index of Specifications and Standards
DSN	Defense Switched Network
ECSA	Exchange Carriers Standards Association
EIA	Electronic Industries Association
EL	element layer
EML	element management layer
ESF	extended superframe format
FDDI	Fiber Distributed Data Interface
FR-SSCS	frame relay - service-specific convergence sublayer
GFC	generic flow control
GNMP	Government Network Management Profile
HEC	header error control
IEEE	Institute of Electrical and Electronic Engineers
ILMI	interim local management interface
IP	Internet Protocol
ISDN	Integrated Services Digital Network
ISO	International Organization for Standardization
ITU	International Telecommunications Union
ITU-T	ITU - Telecommunication Standardization Sector (formerly CCITT)
LB	letter ballot
LL	link layer
MAC	media access control
Mbps	megabit per second
MIB	management information base
MIL-STD	military standard

MLPP	multi-level precedence and preemption
NATO	North Atlantic Treaty Organization
NE	network element
N-ISDN	narrowband-ISDN
N-ISUP	narrowband-ISDN user part
NML	network management layer
NNI	network-node interface
OAM	operation and maintenance
OC	optical carrier
OSI	Open Systems Interconnection
PCS	personal communication services
PDU	protocol data unit
PMD	physical medium dependent
P-NNI	private network node interface
PVCC	permanent virtual channel connections
QOS	quality of service
RFC	request for comment
SAAL	Signaling ATM Adaptation Layer
SAR	segmentation and reassembly
SDH	synchronous digital hierarchy
SIG	SMDS Interest Group
SMDS	switched multi-megabit data service
SML	service management layer
SNMP	Simple Network Management Protocol
SONET	synchronous optical network
SSCF	service-specific coordination function
SSCOP	service-specific connection-oriented protocol
SSCS	service-specific convergence sublayer
STANAG	standardization agreement
STM	synchronous transport module
STP	shielded twisted pair
STS	synchronous transport system
SVCC	switched virtual channel connection
TC	transport connect; transmission convergence
TMN	telecommunications management network
UNI	user-to-network interface
UTP	unshielded twisted pair
VBR	variable bit rate
VCC	virtual channel connection
VCI	virtual channel identifier
VPC	virtual path connection
VPI	virtual path identifier
WAN	wide area network
WNDP	worldwide numbering and dialing plan

4. GENERAL REQUIREMENTS

4.1 General. ATM is an integrating concept that enables all types of information, from voice to data to video, to be handled by common transmission and switching facilities. ATM bearer service supports connection-oriented, sequence-preserving, cell-based communications service between two or more ATM end systems. ATM has been widely adopted for use in broadband-integrated services digital networks (B-ISDN). This MIL-STD, which is a profile of ATM standards, addresses the standardization of digital hierarchies, multiplexing structures, switching, and interfaces ATM subnetworks. The term *B-ISDN* is used for convenience, to refer to and emphasize the broadband aspects of ISDN. The intent, however, is that there be one comprehensive notion of an ISDN that provides broadband and narrowband ISDN services. B-ISDN is a telecommunications concept defined by ITU recommendations and ANSI standards to provide integrated services, two of which are interactive services and distribution services. These two main service categories are defined in ITU-I.211, sections 1.2 and 1.3.

4.2 Asynchronous transfer mode. ATM networks use fixed-size packets transmitted across ATM networks with the use of fast packet-switching technology at each node. The ATM function is divided into two layers: the ATM layer, which is common to all services and provides fast packet-transfer capabilities; and the ATM adaptation layer (AAL), which maps higher-layer information into ATM cells to be transported over the network. Commercial standards for ATM are based on the availability of highly reliable (for example BER = 10^{-11}) transmission facilities (fiber, cable, SONET). The use of ATM over transmission media exhibiting significantly higher BERs (e.g., satellite, wireless, and tactical radios) will require forward error correction (FEC) tailored to each specific transmission media. This is especially true for satellite links that also introduce significantly higher delay. Application of FEC is part of the transmission equipment and is outside the scope of this MIL-STD. The upper layer protocols needed to accommodate the satellite delays have not been standardized. Use of ATM over limited-bandwidth and noisy channels, in general, is an area for future study.

4.2.1 Cell format. All user traffic appears at ATM network interfaces as fixed-length cells. Each cell consists of 53 octets. The cell header consists of 5 octets, and the cell payload consists of 48 octets.

4.2.2 User-to-network interface (UNI). The UNI is a shared boundary between the network and user terminal equipment. A private (or base) network switch is viewed as a terminal by the public network. Thus, the UNI is also the interface between base

networks and public networks. Two types of subscriber-network elements may be connected at the ATM network UNI: ATM and non-ATM.

4.2.2.1 ATM subscriber-network elements . ATM subscriber-network elements (voice, data, and video terminals) connected directly to ATM networks shall generate ATM cells and comply with the ATM UNI specification (see Figure 1 and Figure 2 for ATM UNI). Reference MIL-STD-187-700A, Figure 1 and sections 1.6 and 3, for definitions and use of terms such as *subscriber-network elements*. The base ATM network shown in Figure 2 is expanded in Figure 3. The base ATM and private network node interface (P-NNI) is described in 5.4.

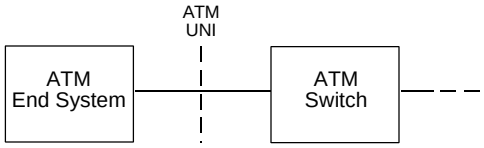

a. ATM user connection

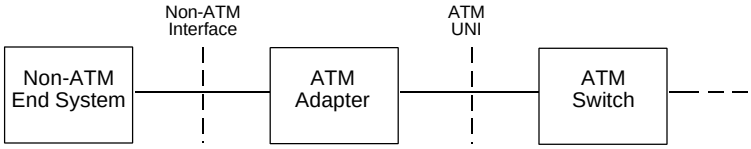

b. Non-ATM user connection

FIGURE 1. ATM UNI and Non-ATM Interface.

4.2.2.2 Non-ATM end systems . Non-ATM end systems are connected to ATM networks by means of ATM adapters (AA) (see Figures 1b and 2). The term *non-ATM end systems* includes all end systems that are not ATM. It does not exclude end systems connected via permanent connections or connections established by an authorized third party. Non-ATM end systems are connected via non-ATM interfaces. AAs include all functions necessary for interworking between ATM switches and non-ATM end systems. AAs may be located in ATM access switches or may be located separately, as shown in Figure 1b. ATM networks allow information exchange between and among ATM end systems and non-ATM end systems. AAs include an AAL. The AAL segments data provided by non-ATM terminals into cells. End-system data may be

]

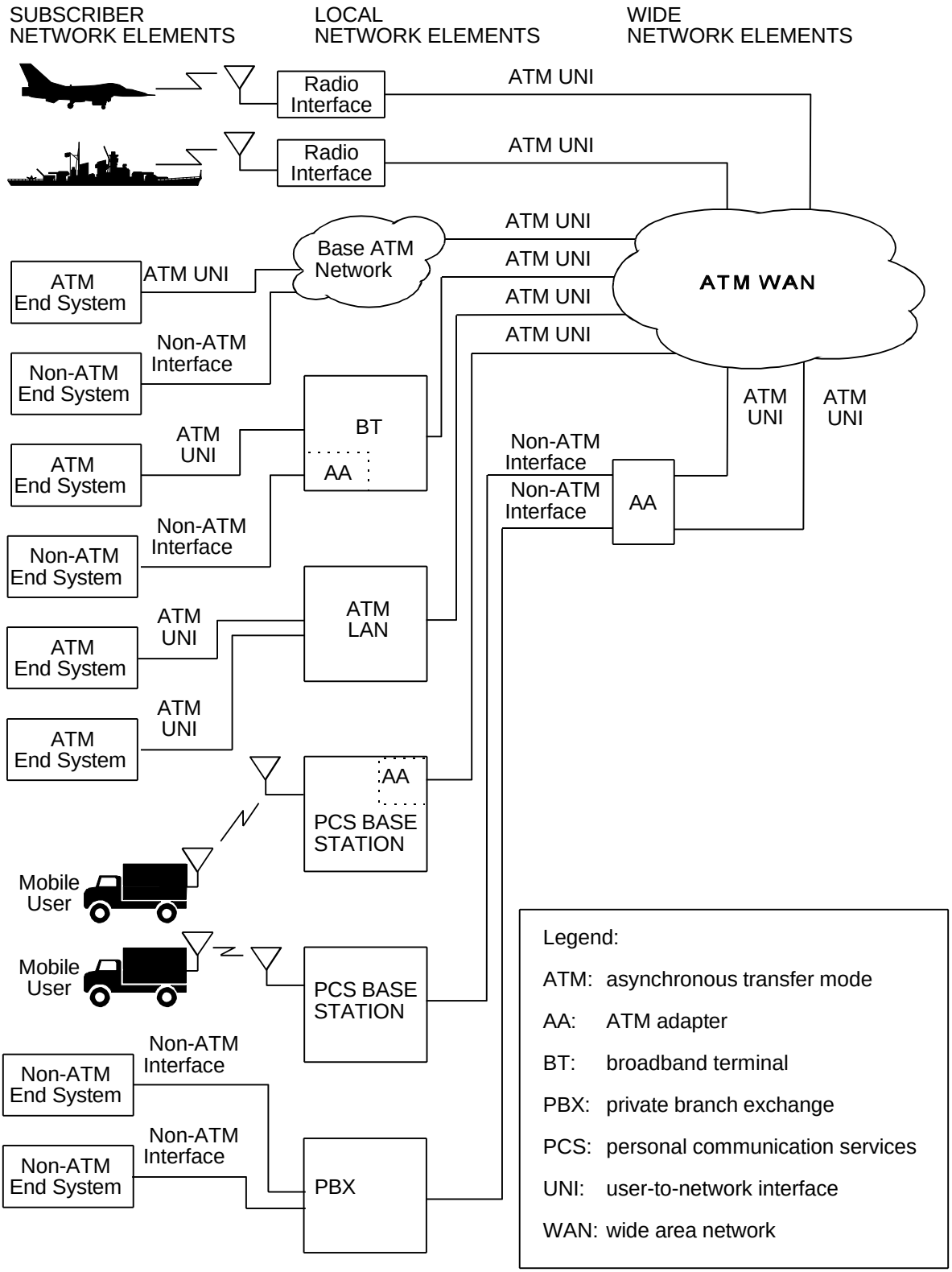

FIGURE 2. Examples of ATM UNIs and Non-ATM Interfaces

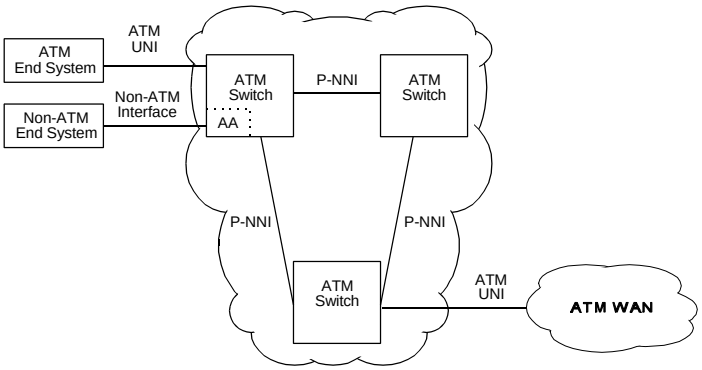

FIGURE 3. Base ATM Network.

provided as a continuous bit stream or as protocol data units (PDU).

4.2.3 Network-to-node interface (NNI) . The interface between ATM switches shall comply with the NNI standards specified in 5.3.4.

4.2.4 Private network-to-node interface (P-NNI) . The P-NNI is the interface between switches in a private (or base) network. Users ensure that the end systems use common interoperable AAL and higher layers. Detailed requirements for AALs are in section 5.

4.2.5 B-ISDN protocol reference model . ATM end systems and networks are based on the protocol architecture illustrated in the B-ISDN protocol reference model, Figure 4. The protocol reference model is divided into multiple planes and multiple layers.

4.2.5.1 Planes structure . The B-ISDN reference model consists of the following planes: user plane, control plane, and management plane.

4.2.5.1.1 User plane . The user plane, with its layered structure, provides for user information transfer, along with associated controls (such as flow control, and recovery from errors). The layered structure consists of higher layers, AAL, ATM, and physical layers. The higher layers in the user plane are the responsibility of the end users.

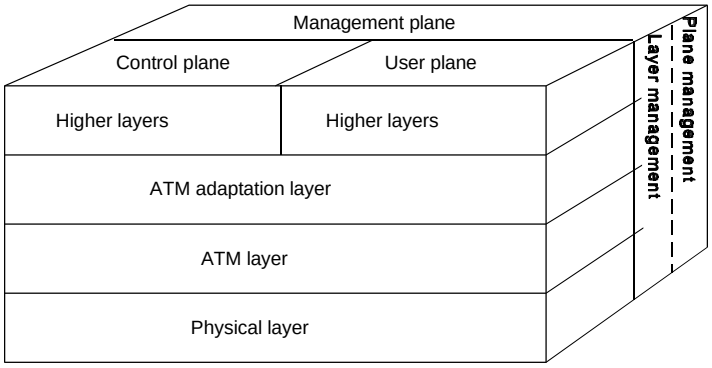

FIGURE 4. B-ISDN Protocol Reference Model

4.2.5.1.2 Control plane . The control plane, with its layered structure, performs the call control and connection control functions; it deals with the signaling necessary to set up, supervise, and release calls and connections. The layered structure is the same as for the user plane.

4.2.5.1.3 Management plane . The management plane provides two types of functions: plane management and layer management.

4.2.5.1.3.1 Plane management . Plane management, which has no layered structure, performs management functions related to a system as a whole and provides coordination between and among all the planes.

4.2.5.1.3.2 Layer management . Layer management handles the operation and maintenance (OAM) information flows specific to the layer concerned. There are five bidirectional information flows: F1, F2, F3, F4, and F5, referred to as OAM flows, defined in ITU-T I.610, section 3. F1, F2, and F3 OAM flows, which are associated with the physical layer, shall conform to ANSI I.610, sections 4 and 5. F4 and F5 OAM flows are associated with the ATM layer (see 5.1.2.3).

4.2.5.2 Layered structure . The B-ISDN reference model has a layered structure consisting of higher layers, AAL, ATM, and physical layers.

4.2.5.2.1 Higher layers . Higher layers perform the functions related to the individual user services provided. The higher layers, in the control plane, apply to both end systems and networks. Higher layers in the user plane apply only to end

systems. To achieve interoperability between ATM end systems, each higher layer must have a peer in the other end system.

4.2.5.2.2 ATM adaptation layer . The AAL adapts the services provided by the ATM layer to the services required by high layers. The AAL supports both user and control plane functions, and supports information transfer between and among ATM end systems.

4.2.5.2.3 ATM layer . The ATM layer is common to all services and provides fast packet-transfer capabilities, based on a 53-byte cell. The 53-byte cell consists of a 5-byte header and a 48-byte payload.

4.2.5.2.4 Physical layer . The physical layer consists of two sublayers. The physical medium dependent (PMD) sublayer includes only physical-medium-dependent functions. The transmission convergence (TC) sublayer performs all functions required to transform a flow of cells into a flow of bits, which can be transmitted and received over a physical medium.

4.2.6 Virtual channel connections . Prior to transmission of traffic cells, a virtual channel connection (VCC) is established across the ATM network, providing a connection between two or more ATM end points. Permanent virtual channel connections (PVCC) are set up and torn down by network managers (by means of an operational or administrative message, in response to a customer request). Switched virtual channel connections (SVCC) are established and released by using the signaling virtual channel (see 5.1.4).

4.2.7 Signaling capabilities . The signaling capabilities include the ability to control virtual channel and virtual path connections for information transfer; support communications configurations on a point-to-point and point-to-multipoint basis; negotiate or renegotiate source traffic characteristics of a connection; reconfigure already established connections; and support interworking with non B-ISDN services.

4.2.7.1 Point-to-point communications . The ATM Forum's UNI specification supports point-to-point communications. A *point-to-point* connection is a bidirectional connection between two end points. A point-to-point connection provides unidirectional or bidirectional asymmetric communications between parties "A" and "B." Connections are established, modified, or released by either party "A," "B," or an authorized third party (C or D), as shown in Figure 5.

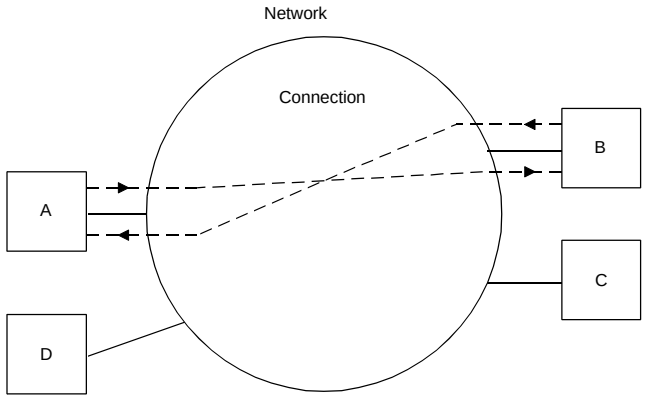

FIGURE 5. Point-to-Point Communications

4.2.7.2 Point-to-multipoint communications . The ATM Forum's UNI specification supports unidirectional point-to-multipoint communications. A point-to-multipoint connection is a connection from a "root" node to multiple "leaf" nodes. Point-to-multipoint connection shall provide unidirectional communications from the "root" Party "A" to "leaf" parties "B" and "C," as shown in Figure 6. The bandwidth received by parties "B" and "C" may be different from the bandwidth transmitted by party "A." The connections are established, modified, or released in one of three ways: (1) the "root" party may request the action, (2) either "leaf" party may request the action, or (3) an authorized nonassociated party (party D) may request the action. The requester is allowed to specify which called parties are required to agree to be part of the connection before the connection can be executed.

4.3 Interworking . ATM networks support interworking between ATM end systems and non-ATM end systems. ATM networks shall interwork with other ATM networks and non-ATM networks (see 5.5.2). When interworking with non-ATM end systems and networks, interconnection shall be via AAs (see 5.5.1). AAs include service-specific protocols to support non-ATM end systems and networks. Interworking with specific non-ATM end systems and networks is described in section 5.5.

4.4 ATM network management . ATM network management processes operation, administration, and maintenance data groups into five common management application functions:

a. Fault management
b. Configuration management

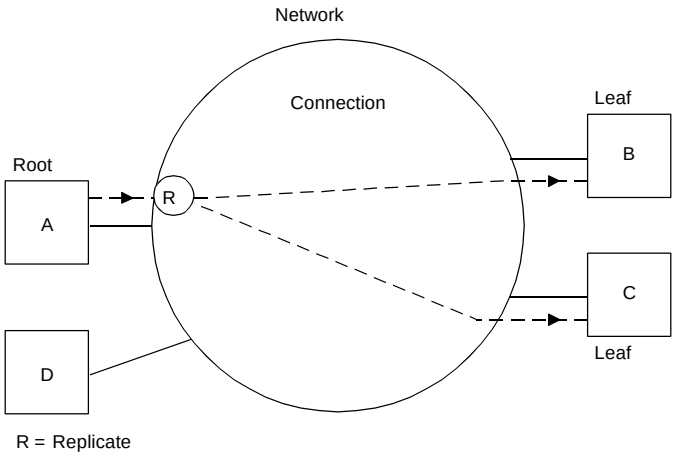

FIGURE 6. Unidirectional Point-to-Multipoint Communications.

c. Account management
d. Performance management
e. Security management

The objective of network management is to support the establishment, reconfiguration, and maintenance of a stable signaling and user-to-network environment. To achieve this objective, network management entities within each segment of the network are based on an integrated management architecture and employ a set of common management protocols, as defined in FIPS-PUB-179 and MIL-HDBK-1351. ATM network management for the DISN wide area network (WAN) is based on telecommunications management network (TMN) standards. ATM network management for base ATM networks is based on the AF UNI specification (see section 5.6).

4.4.1 Telecommunications management network . TMN is a network of management systems, which provides integrated management of telecommunications networks based on ITU recommendations and ANSI standards. The TMN standards extensively use Open Systems Interconnection (OSI) system management standards and their object-oriented techniques, which promote the reusability of managed object class definitions, thus providing a framework for the management of telecommunications networks and services in an open, multivendor environment.

4.4.1.1 ATM network management architecture . The ATM network management architecture is defined in ITU-T M.3010. TMN management services for B-ISDN are found in ITU-T M.3205.

The five TMN layers are the element layer (EL), element management layer (EML), network management layer (NML), service management layer (SML), and business management layer (BML). Standards bodies, to be current with trends in products currently available, have limited their activity in the EL, EML, and NML. Classifying functions into EL, EML, or NML does not imply any particular physical implementation.

4.4.1.2 TMN network information models . To ensure common solutions for the management of switching, transmission, and other technologies, ITU has generated an initial Generic Network Information Model, M.3100. Initial application of TMN has been restricted to its interface with transmission equipment.

4.4.2 Base ATM network management . Base ATM network management shall comply with section 4 of the AF UNI specification (see 5.6.1). An ATM information exchange between a managed system (e.g., an ATM NE) and a managing system is specified in AF-NM-0027.001. The focus of AF-NM-0027.001 is on the definition of a management information base (MIB) for CMIP implementation of the M4 interface.

(This page intentionally left blank.)

5. DETAILED REQUIREMENTS

5.1 ATM user-to-network interface . The ATM user-to-network interface consists of the physical interface, and the formats and protocols that control information flow. A profile of protocol and interface standards for ATM is shown in Figure 7. The protocol layers applicable to the user and control planes for ATM UNI are illustrated in Figure 8. The characteristics described in 5.1.1 through 5.1.5.2 apply to the ATM UNI.

5.1.1 Physical layer . UNI physical layer standards specified herein provide for 155.52-Mbps (optical and electrical), 100-Mbps (optical), STS-1 (electrical), DS-3, DS-1, and E1 rates. The physical layer provides transmission services to the ATM layer. The physical layer consists of two sublayers, the transmission convergence (TC) sublayer, and the physical media dependent (PMD) sublayer. The TC sublayer performs all functions required to transform a flow of cells into a continuous flow of bits that can be transmitted and received over a physical medium. Common functions of the TC sublayer--including header error control (HEC), header sequence generation/verification, and cell delineation--are specified in ITU-T I.432. These and other TC sublayer functions, including transmission frame adaptation and transmission frame generation/recovery, are specified below. The PMD sublayer includes only physical-medium-dependent functions, including line coding, bit timing, and bit transmission over the physical medium.

5.1.1.1 SONET STS-3c physical layer interface . This interface provides a 155.52-Mbps ATM network access.

5.1.1.1.1 TC sublayer for SONET STS-3c . The TC sublayer shall perform the functions of HEC generation/verification, cell scrambling and descrambling, cell mapping, cell delineation, and ATM payload construction indication, as specified in the ATM UNI specification, section 2.1.1.2.

5.1.1.1.2 PMD sublayer for SONET STS-3c . The 155.52-Mbps physical medium interface may be an optical, an unshielded twisted pair, or a shielded twisted pair interface.

5.1.1.1.2.1 SONET-based STS-3c optical interface . The PMD sublayer for the optical SONET STS-3c shall be as specified in the ATM UNI specification, section 2.1.1.1.

		CONTROL PLANE	USER PLANE					
Network Layer		Addressing AF3.1 & WNDP Connection (UNI/NNI) Q.2931/Q.2764	NULL					
ATM Adaptation Layer (AAL)	SSCS	SSCF (UNI/NNI) T1.638/T1.645 SSCOP T1.637	AAL 1 Null	AAL 2	AAL 3/4 Service-specific	AAL 5 Service-specific		
	CP	I.363	T1.630		T1.629	I.363		
ATM Layer		AF 3.1, Section 3			T1.627			
Physical Layer	TC	SONET STS-3c AF 3.1	Fiber Channel AF 3.1	FDDI AF 3.1	STS-1 AP-18	DS-3 I.432 T1.107, 107A	E-1 I.432 G.704	DS-1 AP-16
	PMD	AF 3.1 Optical 155.52 Mbps	AP-15 UTP-5 / STP STP / Optical AF 3.1 Optical	AF 3.1 Optical 100 Mbps	AP-18 UTP-3 51.84 Mbps	T1.404 T1.102 Coaxial 44.736 Mbps	G.703 2.048 M	AP-16 1.544 M

LEGEND:
AF 3.1: AF UNI specification
AP-15: AF-PHY-0015.000
AP-16: AF-PHY-0016.000
AP-18: AF-PHY-0018.000
WNDP: worldwide numbering and dialing plan

NOTE: Q.2931 refers to Q.2931, as modified by AF UNI specification, section 5

FIGURE 7. Profile of ATM Base Standards

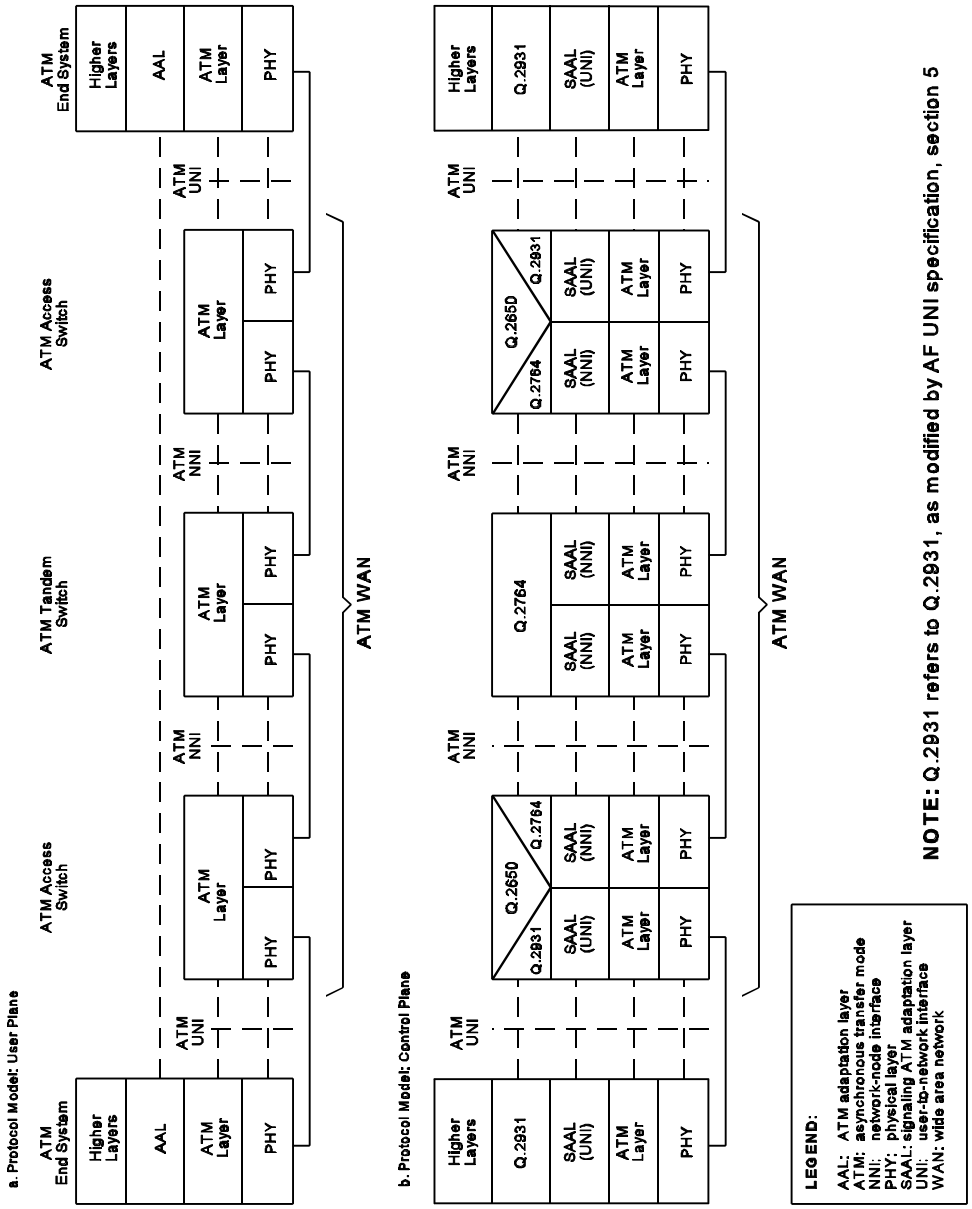

NOTE: Q.2931 refers to Q.2931, as modified by AF UNI specification, section 5

FIGURE 8. ATM UNI and ATM NNI.

5.1.1.1.2.2 SONET-based STS-3c unshielded twisted pair (UTP-5) interface . The unshielded twisted pair interface shall be in accordance with ATM Forum specification AF-PHY-0015.000, sections 2, 3, 4, and 5.1.

5.1.1.1.2.3 SONET-based STS-3c shielded twisted pair (STP) interface . The shielded twisted pair interface shall be in accordance with ATM Forum specification AF-PHY-0015.000, sections 2, 3, 4, and 5.2.

5.1.1.2 Fiber channel, 155-Mbps physical layer interface . This interface is based on a direct cell-mapped framing structure, which provides a payload rate of 149.760 Mbps.

5.1.1.2.1 Fiber channel, TC sublayer for 155-Mbps interface . This 155.52-Mbps TC sublayer uses direct cell mapping with 1 cell of each 27 cells carrying physical-layer overhead information. The TC sublayer functions of frame and cell delineation, clock recovery, and HEC generation/verification (ITU-T I.432) shall be in accordance with the ATM UNI specification, section 2.4.3.

5.1.1.2.2 Fiber channel, PMD sublayer for 155-Mbps interface . A PMD sublayer is specified in 5.1.1.2.2.1 for an optical interface, and in 5.1.1.2.2.2 for a shielded twisted pair interface for the 155.52-Mbps direct cell-mapped interface.

5.1.1.2.2.1 Optical interface . The fiber specifications shall be as specified in the ATM UNI specification, section 2.4.1.

5.1.1.2.2.2 Shielded twisted pair (STP) interface . This interface enables use of the installed 150-ohm cable plant and connectors, as currently used for IEEE 802.5 token ring networks. The interface shall be in accordance with the ATM UNI specification, section 2.4.2.

5.1.1.3 100-Mbps physical layer interface (optical) . This optical interface is based on the Fiber Distributed Data Interface (FDDI) physical layer. The ATM cells are carried with no physical-layer framing structure.

5.1.1.3.1 TC sublayer for 100-Mbps interface . The TC sublayer functions of cell delineation and HEC generation/verification shall be in accordance with the ATM UNI specification, section 2.3.2.

5.1.1.3.2 PMD sublayer for 100-Mbps interface . Line coding for the 100-Mbps interface shall be in accordance with the ATM UNI specification, section 2.3.1.

5.1.1.4 SONET-based STS-1 physical layer interface (UTP-3). This section provides a 51.84-Mbps interface over Category 3 unshielded twisted pair.

5.1.1.4.1 TC sublayer for SONET-based STS-1 interface. The TC sublayer functions shall be in accordance with AF-PHY-0018.000, section 3.

5.1.1.4.2 PMD sublayer for SONET-based STS-1 interface. The PMD sublayer interface shall be in accordance with AF-PHY-0018.000, section 2. Extensions to support operation at 25.92-Mbps or 12.96-Mbps rates are optional.

5.1.1.5 DS-3 Direct Mapped physical layer interface (coaxial). This section provides a 44.736-Mbps interface over coaxial cable.

5.1.1.5.1 TC sublayer for DS-3 Direct Mapped interface. ATM cells shall be directly mapped into the DS-3 payload. The octet structure of the cells shall be aligned with the nibble structure of the DS-3 M-frame. The M-frame is organized such that 84 bits of payload follow every overhead bit in accordance with ANSI T1.107, section 8.1. The 84 bits shall be organized into 21 consecutive nibbles. ATM cells may cross M-frame boundaries. The bit rate available for the transport of ATM cells is nominally 44.21 Mbps. The DS-3 interface format uses C-bit parity application, as described in ANSI T1.107a.

5.1.1.5.2 PMD sublayer for DS-3 Direct Mapped interface. The electrical interface for directly mapped DS-3 shall be in accordance with T1.404 for network interfaces and T1.102 for customer installations.

5.1.1.6 E-1 physical layer interface. This section provides a 2.048-Mbps interface based on ITU-T G.704.

5.1.1.6.1 TC sublayer for E-1 interface. The TC sublayer shall provide the functions of ATM cell mapping, cell rate decoupling, cell delineation, and HEC generation/verification, in accordance with ITU-T G.704 and ITU-T I.432. The frame format shall be in accordance with Figure 7 of MIL-STD-187-700A, and defined in ITU-T G.704. ATM cells shall be mapped into time slots 1 through 31 of the E1 frame so that the octet structure of the ATM cell is aligned with the octet structure of the E1 frame. Time slot 0 is reserved for frame alignment signals.

5.1.1.6.2 PMD sublayer for E-1 interface. The E-1 physical media-dependent interface shall be in accordance with ITU G.703.

5.1.1.7 DS-1 physical layer interface . This section provides a 1.544-Mbps interface based on AF-PHY-0016.0000.

5.1.1.7.1 TC sublayer for DS1 interface . The TC sublayer shall provide the functions of ATM cell mapping, cell rate decoupling, cell delineation, and HEC generation/verification, in accordance with AF-PHY-0016.000, sections 3 and 4. The frame format shall be the 24-frame multiframe extended superframe format (ESF).

5.1.1.7.2 PMD sublayer for DS1 interface . The DS-1 interface shall be in accordance with AF-PHY-0016.000, section 2.

5.1.1.8 Satellite physical layer interface . It is anticipated that satellites will play a significant role in DISN. However, standards to accommodate the high BERs and delays for ATM over satellites are not yet available.

NOTE: The ATM Forum is developing additional physical layer interfaces. These physical layer interfaces may be used when approved, and will be cited in later versions of this MIL-STD.

5.1.2 ATM layer . The ATM layer provides connection-oriented sequence preserving service to the higher layers by assigning connection identifiers to each link of a connection when required, and releasing them when no longer needed. The ATM layer uses ATM connections to provide its service. Signaling and user information are carried on separate ATM layer connections. The ATM layer provides its users with multiple types of communications services, such as unidirectional point-to-multipoint communications, and bidirectional asymmetrical point-to-point communications. The ATM layer includes support for the control and user planes, and for ATM layer management. The ATM layer shall be implemented in accordance with AF UNI specification, section 3, except that the referenced letter ballot, T1 LB310, shall be replaced with the approved and published standard, ANSI T1.627.

5.1.2.1 ATM cell structure and encoding at UNI . ATM cell header format and encoding at UNI shall be as specified in the AF UNI specification, section 3.3.

5.1.2.2 ATM layer functions . ATM layer functions shall be in accordance with AF UNI specification, section 3.4.

5.1.2.3 ATM layer management functions . ATM layer management functions shall be in accordance with the AF UNI specification, section 3.5.

5.1.2.4 Preassigned header field values . Preassigned virtual path indicator (VPI) and virtual channel indicator (VCI) values reserved for unassigned cells shall be in accordance with AF UNI specification, section 3.4.3.

5.1.2.5 Traffic control and congestion control . Traffic control and congestion control shall be in accordance with the AF UNI specification, section 3.6.

5.1.3 Signaling ATM Adaptation Layer (SAAL) . SAAL conveys signaling information between layer 3 entities across the UNI. SAAL consists of two parts: a common part and a service-specific part. The service-specific part, called the *service-specific convergence sublayer* (SSCS), is divided into two sublayers: the service-specific coordination function (SSCF) and the service-specific connection-oriented protocol (SSCOP). The SSCF shall map the services of SSCOP to the needs of the layer 3 entity, in accordance with ANSI T1.638, sections 7 through 11. SSCOP shall provide assured data delivery for the signaling PDUs by means of selective retransmission, in accordance with ANSI T1.637, sections 6 through 8. SSCOP uses the services of the common part protocol, the SAR and CPCS, which shall be in accordance with ITU-T I.363, section 6.

5.1.4 UNI signaling . Signaling at the UNI shall be in accordance with the AF UNI specification, section 5. The signaling function supports point-to-point and point-to-multipoint network connections. ATM signaling permits users on B-ISDN to connect to users on N-ISDN. ATM signaling also permits users on different N-ISDNs to interconnect via B-ISDN (see 5.5.2.1).

5.1.4.1 Connection control . Connection at the UNI shall be in accordance with the AF UNI specification. The AF UNI specification provides deviations from ITU-T Q.2931, which specifies the procedures for establishing, maintaining, and clearing point-to-point connections at the ATM UNI.

5.1.4.2 Addressing . UNI signaling shall support the address formats specified in AF UNI specification, section 5.1.3 and Annex A. For the Defense Information System Network, the numbering plan specified in DCAC 370-175-13, the section titled *DSN Worldwide Numbering and Dialing Plan* (WNDP), shall be supported.

5.2 ATM adaptation layer (AAL) . The AAL supports user plane functions and information transfer between and among ATM end systems. Several AAL protocols are available to support different types of users. The AAL is subdivided into sublayers, as shown in Figure 7. The common part (CP) sublayer consists of

the segmentation and reassembly (SAR) sublayer, and the common part convergence sublayer (CPCS). The CPCS functions include delineation and transparency of user information, and error detection. The SAR sublayer handles (1) the segmentation of data units so that they can be mapped into fixed-length payloads of the ATM cells, and (2) the reassembly of data units from ATM cells. The SSCS provides the specific service-related functions of the AAL. Variable bit rate (VBR) services include data service for a range of applications from bursty data to compressed video. Constant bit rate (CBR) services include voice and video (circuit emulation). AAL protocols AAL 1-5 for user services are described below.

5.2.1 AAL 1. AAL 1 shall be implemented in accordance with ANSI T1.630. AAL 1 provides a 47-octet user payload, with a 1-octet header to support timing and sequence integrity. AAL 1 supports CBR applications in which a timing relationship is required between source and destination, such as voice or video (circuit emulation). The CBR service clock may be synchronous or asynchronous to the B-ISDN network clock. The normal mode shall be synchronous. Bit count integrity (BCI) shall be ensured in either mode, in conformance with ANSI T1.630, section 9. For the asynchronous mode, clock timing regeneration shall be by adaptive clock recovery as described in AF-SAA-0032.000, section 3.4.2. This method uses local procedures to compensate for jitter, with no timing information carried through the network. Adaptive clock recovery methods are not subject to standardization. AAL-1 shall support circuit emulation for DS1 and E1 for both unstructured and structured data transfer, in accordance with AF-SAA-0032.000. Adaptive clock recovery is not effective against wander (low frequency component to the cell delay variation). For the asynchronous mode, SRTS as defined in 3.4 of AF-SAA-0032.000 may be used where excessive cell delay variation may be experienced.

5.2.2 AAL 2. AAL 2 supports VBR applications in which a timing relationship is required to exist between source and destination, such as compressed video. This service has not yet been standardized.

5.2.3 AAL 3/4. AAL 3/4 supports VBR data transfer. AAL 3/4 shall comply with ANSI T1.629, which defines the SAR and CPCS. AAL 3/4 shall provide message mode and streaming mode service, in both assured and non-assured operations, in accordance with ANSI T1.629, section 6. For non-assured operations, optional error discard allows corrupted PDUs to be delivered to the user. For assured operations, a reliable link protocol is required in the SSCS. For non-assured operations the SSCS is null. Specific AAL 3/4 requirements are given in 5.2.3.1 and 5.2.3.2.

5.2.3.1 AAL 3/4 functions and structure . The functions and structures of AAL 3/4 shall be in accordance with ANSI T1.629, section 9. The protocol accepts variable-length frames/ packets (up to 64 kbytes) and segments them into cells. It provides for the transparent and sequential transfer of PDUs between corresponding upper-layer entities with an agreed quality of service (QOS). Each cell carries 44 payload octets, plus a 2-octet header and a 2-octet trailer. The payload header and trailer provide protection against misordering of cells, and a 10-bit CRC for error detection. AAL 3/4 provides optional multiplexing of multiple CPCS connections.

5.2.3.2 AAL 3/4 procedures . The AAL 3/4 protocol shall operate in accordance with ANSI T1.629, section 10.

5.2.4 AAL 5. AAL 5 supports VBR services and provides a 48-octet payload. AAL 5 common part protocol shall comply with ITU-T I.363, section 6. No error detection is provided in the cell payload. A 32-bit CRC for error detection is provided in the CPCS PDU, in accordance with ITU-T I.363, section 6. For assured service, the SSCS provides retransmission of erroneous CPCS PDUs. Optional error discard allows corrupted PDUs to be delivered to the user. For non-assured service, the SSCS is null.

5.3 ATM wide area network (WAN) . The interface between ATM WAN switches is referred to as the network-node interface (NNI) (see Figure 8). In the user plane the NNI consists of a physical layer and an ATM layer. The control plane also includes a network layer.

5.3.1 Physical layer . The Physical layer shall use synchronous optical network (SONET) specifications. All electrical interface rates and formats shall conform to ANSI T1.105, sections 6 through 12. A compatible version, referred to as synchronous digital hierarchy (SDH) was published as ITU-T recommendations. The basic modular signal is called the synchronous transport signal level 1 (STS-1) and the optical counterpart is the optical carrier level 1 signal (OC-1). The standard multiplexed rates are OC-N, where N = 3, 12 or 48 (see Table I). The payload rate is the SONET payload, which includes path overhead. User payload is reduced by path overhead. A single-mode fiber-optic transmission interface shall be in accordance with ANSI T1.106.

5.3.2 ATM layer . The ATM layer at the NNI is the same as the ATM layer at the UNI (see 5.1.2) except for the first 4 bits of the cell header. These bits are reserved for generic flow control (GFC) at the UNI. At the NNI, the first 4 bits are used to extend the VPI field.

TABLE I. SONET/SDH Signal Hierarchy .

OC-LEVEL	SONET DESIGNATION	SDH DESIGNATION	BIT RATE (Mbps)	PAYLOAD RATE (Mbps)
OC-1	STS-1	--	51.84	50.112
OC-3	STS-3	STM-1	155.52	150.336
OC-12	STS-12	STM-4	622.08	601.344
OC-48	STS-48	STM-16	2488.32	2405.376

5.3.2.1 ATM cell header format and encoding at NNI . ATM cell header format and encoding at the NNI shall be as specified in ANSI T1.627, section 12.2.2.

5.3.2.2 ATM layer functions . ATM layer functions shall be in accordance with ANSI T1.627, section 10.

5.3.2.3 ATM layer management functions . ATM layer management functions shall be in accordance with ANSI T1.627, sections 9 and 11.

5.3.3 SAAL at the NNI . The SAAL at the NNI is the same as at the UNI (see 5.1.3) except for the SSCF. The SSCF at the NNI shall map the particular requirements of the NNI layer 3 protocol to the SSCOP services, in accordance with ANSI T1.645.

5.3.4 ATM network layer . For Government-owned WANs, signaling at the NNI shall be in accordance with ITU-T Q.2764, as indicated in Figure 8. Interworking between UNI signaling and B-ISUP (ITU-T Q.2764) shall be in accordance with ITU-T Q.2650. When leasing WAN services, the requirement to comply with ITU-T Q.2650 and Q.2764 may be waived.

5.4 Base ATM network . The standards for the base ATM network are based on standards for private ATM networks. The interface between base ATM switches is referred to as the private network-node interface (P-NNI). In the user plane, the P-NNI consists of a physical layer and an ATM layer (see sections 5.1.1 and 5.1.2). The control plane, which also includes a network layer, is shown in Figure 9. Signaling in the base ATM network shall be in accordance with the AF P-NNI signaling specification. It is a modified version of the AF UNI specification section 5, which is based on Q.2931 and denoted in Figure 9 as Q.2931*. The AF P-NNI signaling specification applies to signaling between base ATM switches.

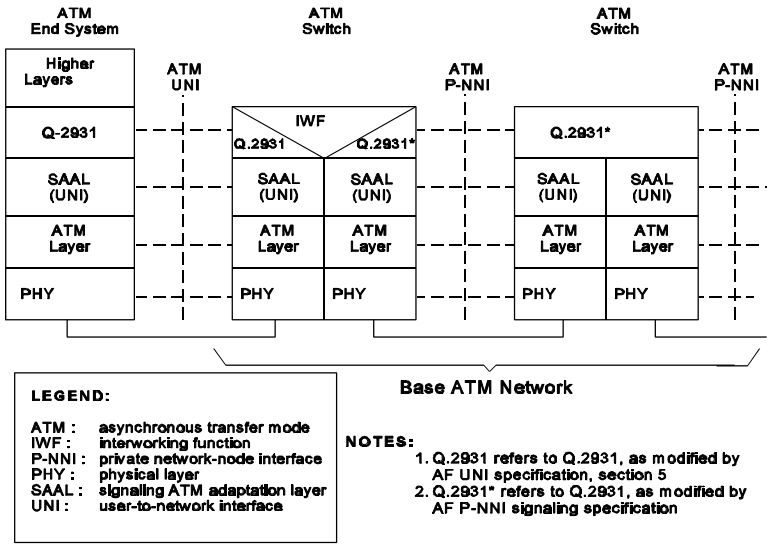

FIGURE 9. Protocol Model: Control Plane for Base ATM Networks.

5.5 Interworking . Interworking with non-ATM end-systems and networks is described in 5.5.1 and 5.5.2.

5.5.1 Interworking with non-ATM end-systems . Non-ATM end-systems shall be connected to ATM end-systems via ATM networks by means of ATM adapters (AA), as shown in Figure 10. For switched service, the AA shall map the non-ATM signaling protocol to the signaling protocol of AF UNI Specification, section 5. For non-switched service, a PVCC must be preestablished. On the end-system side, the AA must also match the physical and link layers unique to the specific non-ATM interface. In some cases, such as stream data, the link layer may be null. On the ATM network side, the AA must match the AAL protocol used by the interconnected ATM end system. The interconnected ATM end system may be another AA, as shown in Figure 11. The AAL protocols may be any of the standard AAL protocols described in 5.2.

5.5.2 Interworking with non-ATM networks . ATM networks support interworking with other ATM networks and optionally non-ATM networks (Figure 12). When interworking with non-ATM networks, interconnection shall be via ATM adapters, which include standardized service-specific convergence functions. Interworking examples are described in 5.5.2.1 through 5.5.2.4.

5.5.2.1 Narrowband ISDN . Interworking in the control plane between N-ISDN and B-ISDN is illustrated in Figure 13a. In this case the ATM network is acting as a transit network between two

N-ISDN networks. Interworking between narrowband ISDN user part (N-ISUP, ANSI T1.113) and broadband ISDN user part (B-ISUP,

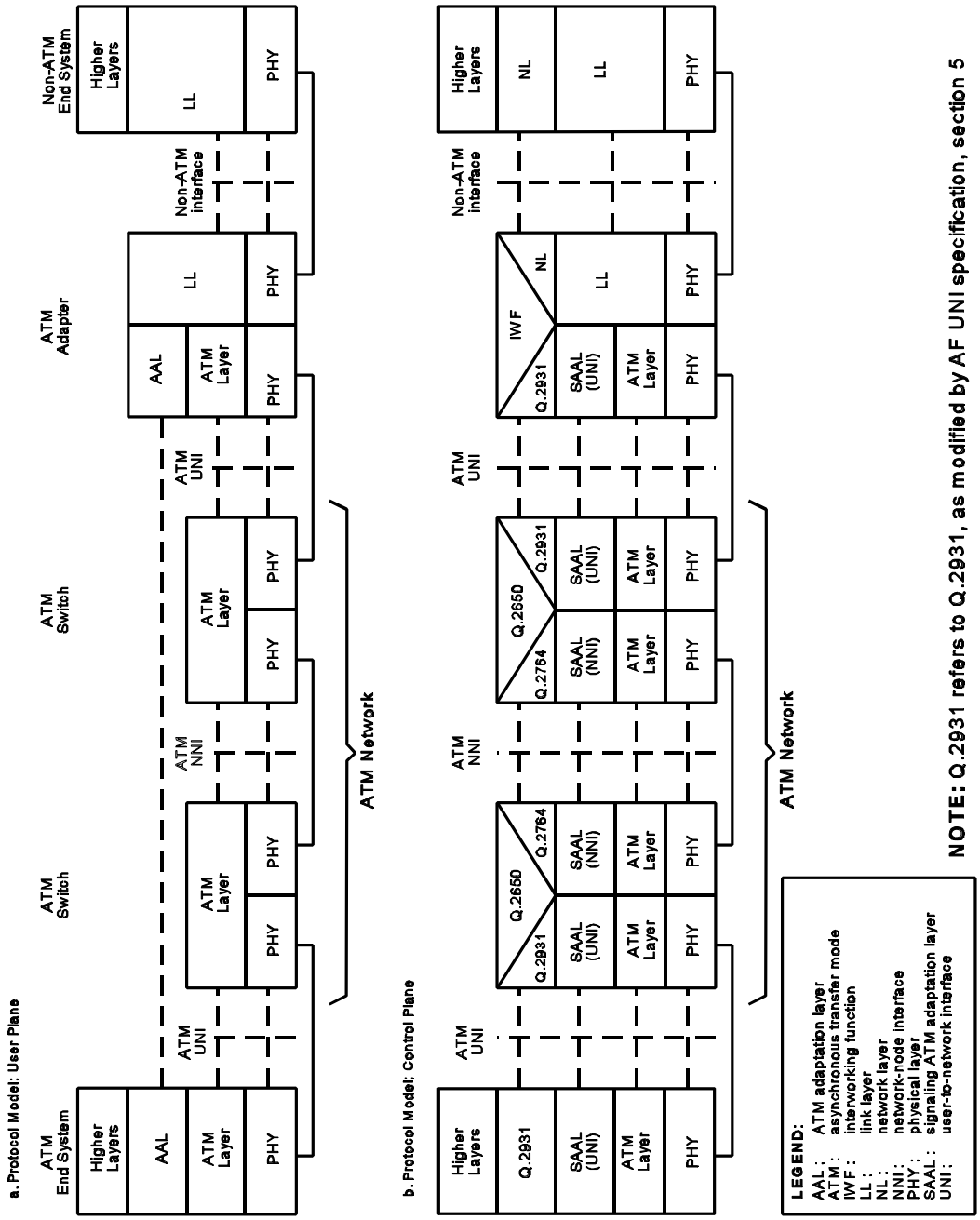

NOTE: Q.2931 refers to Q.2931, as modified by AF UNI specification, section 5

FIGURE 10. Interworking with Non-ATM End Systems.

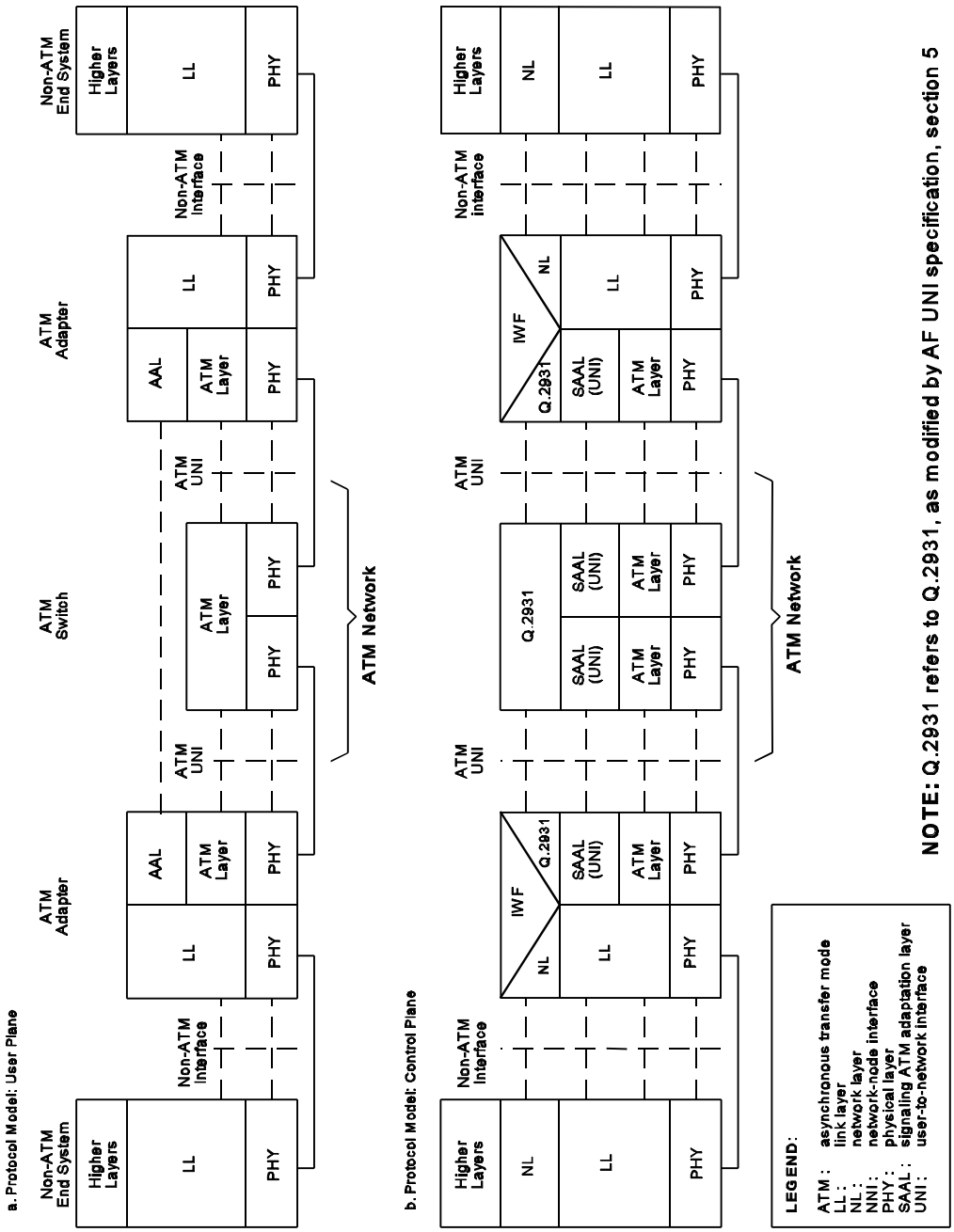

FIGURE 11. Non-ATM End Systems Interworking Across ATM Networks.

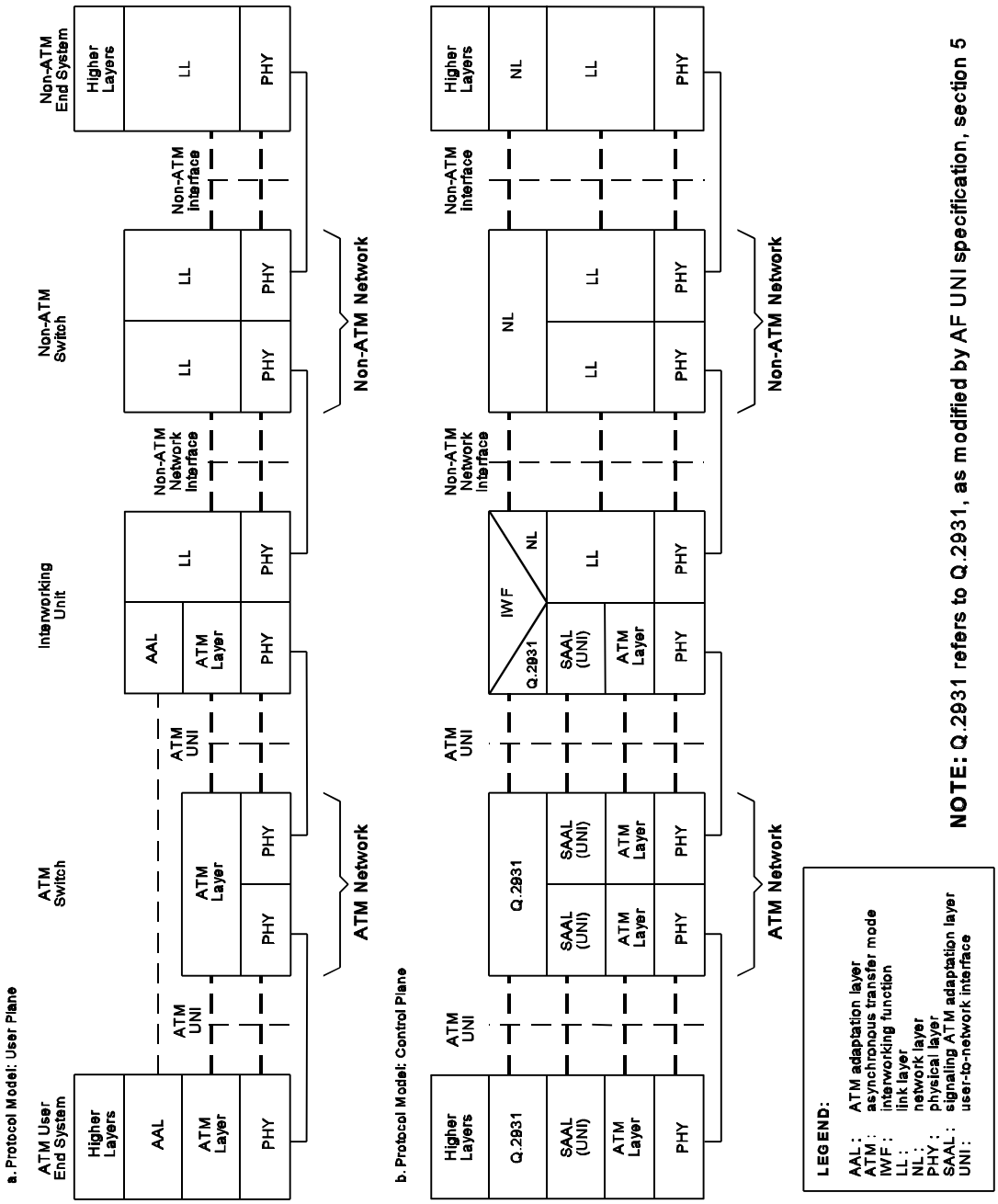

NOTE: Q.2931 refers to Q.2931, as modified by AF UNI specification, section 5

FIGURE 12. Interworking with Non-ATM Networks.

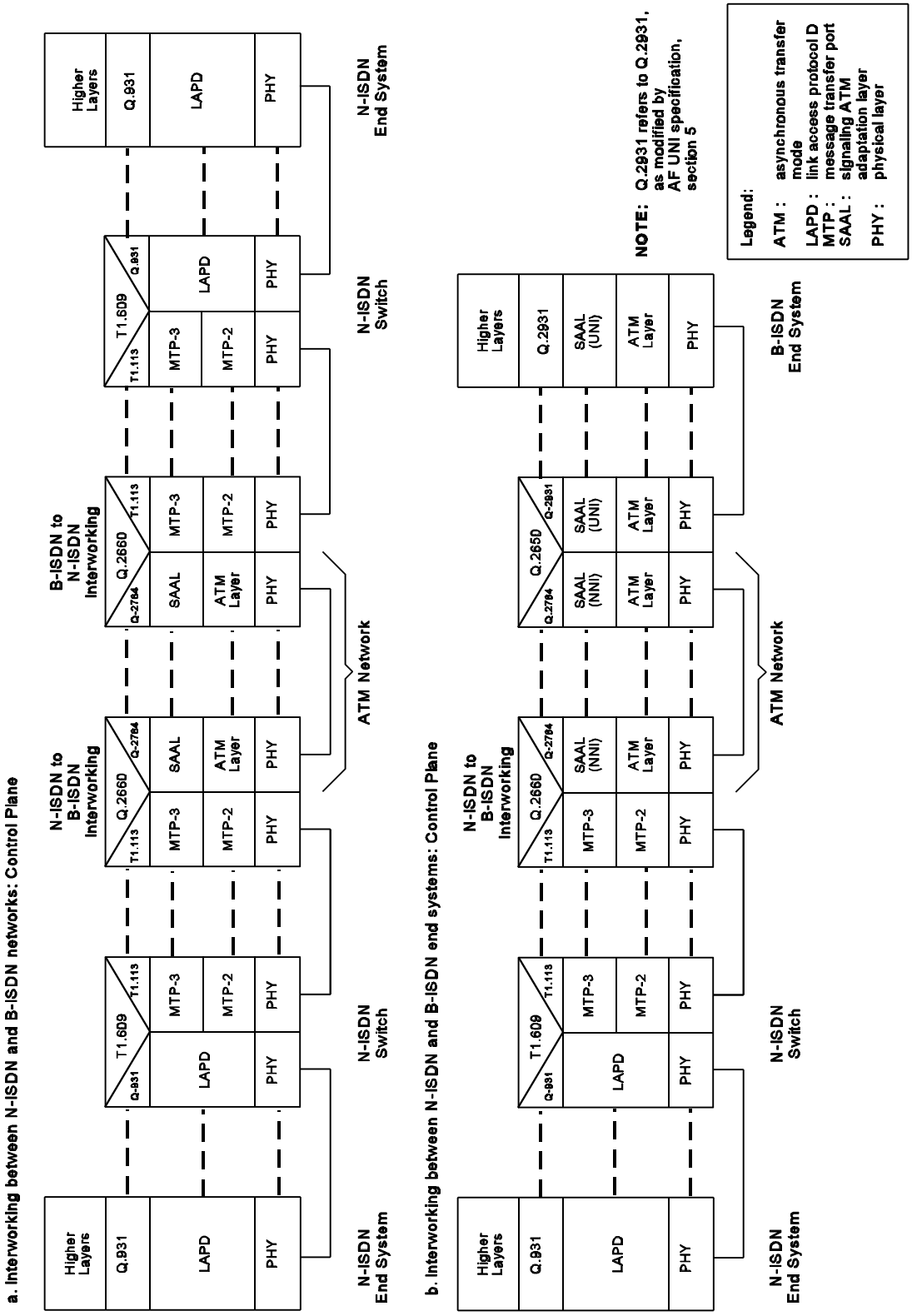

FIGURE 13. N-ISDN Interworking.

ITU-T Q.2764) shall be in accordance with ITU-T Q.2660. Interworking supports basic call and supplementary services. This case of interworking is also relevant to interworking between users on N-ISDN and users on B-ISDN, as illustrated in Figure 13b. In the user plane, a N-ISDN circuit shall be emulated for each VCC, using AAL 1, as specified in AF SAA 0032.000.

5.5.2.2 Frame relay networks . ATM networks may be used to interconnect two frame relay networks, as shown in Figure 14a. The network interworking unit between the frame relay network and the ATM network shall comply with FRF.5. A frame relay service user may interwork with an ATM service user that performs no frame relaying functions. In this case all interworking is performed by the interworking function, as shown in Figure 14b, and the interworking function shall comply with FRF.8.

5.5.2.3 Internet protocol (IP) router subnetworks . Interworking between ATM networks and IP router networks shall be in accordance with RFC 1577. User datagrams shall be encapsulated in AAL 5 CPCS PDUs, in accordance with RFC 1626. An example of IP/ATM interworking is illustrated in Figure 15. In this case the media access control (MAC) sublayer could be that of any IEEE 802 series LAN, or FDDI.

5.5.2.4 Switched multi-megabit data service . Switched multi-megabit data service (SMDS), is a Bellcore proprietary development specified in Bellcore Technical Reference TR-TSV-000772. SMDS is a connectionless public packet-switched data service that provides for the transfer of variable-length data units (up to 9188 octets of information) at high speeds. The operation and features of SMDS are similar to those found in high-speed data networks and LANs. SMDS provides a datagram packet transfer, by which each data unit is handled and switched separately without the prior establishment of a network connection. The variable-length data units are segmented for transmission, with each segment placed into 53-byte cells using AAL 3/4. Open-commercial standards for the SMDS subscriber network interface have not been developed. Interworking between ATM networks and SMDS shall be in accordance with the SMDS Interest Group document SIG-TWG-008. SMDS interworking is illustrated in Figure 16.

5.6 Base network management . Network management requirements for base networks are given in 5.6.1 to 5.6.3.

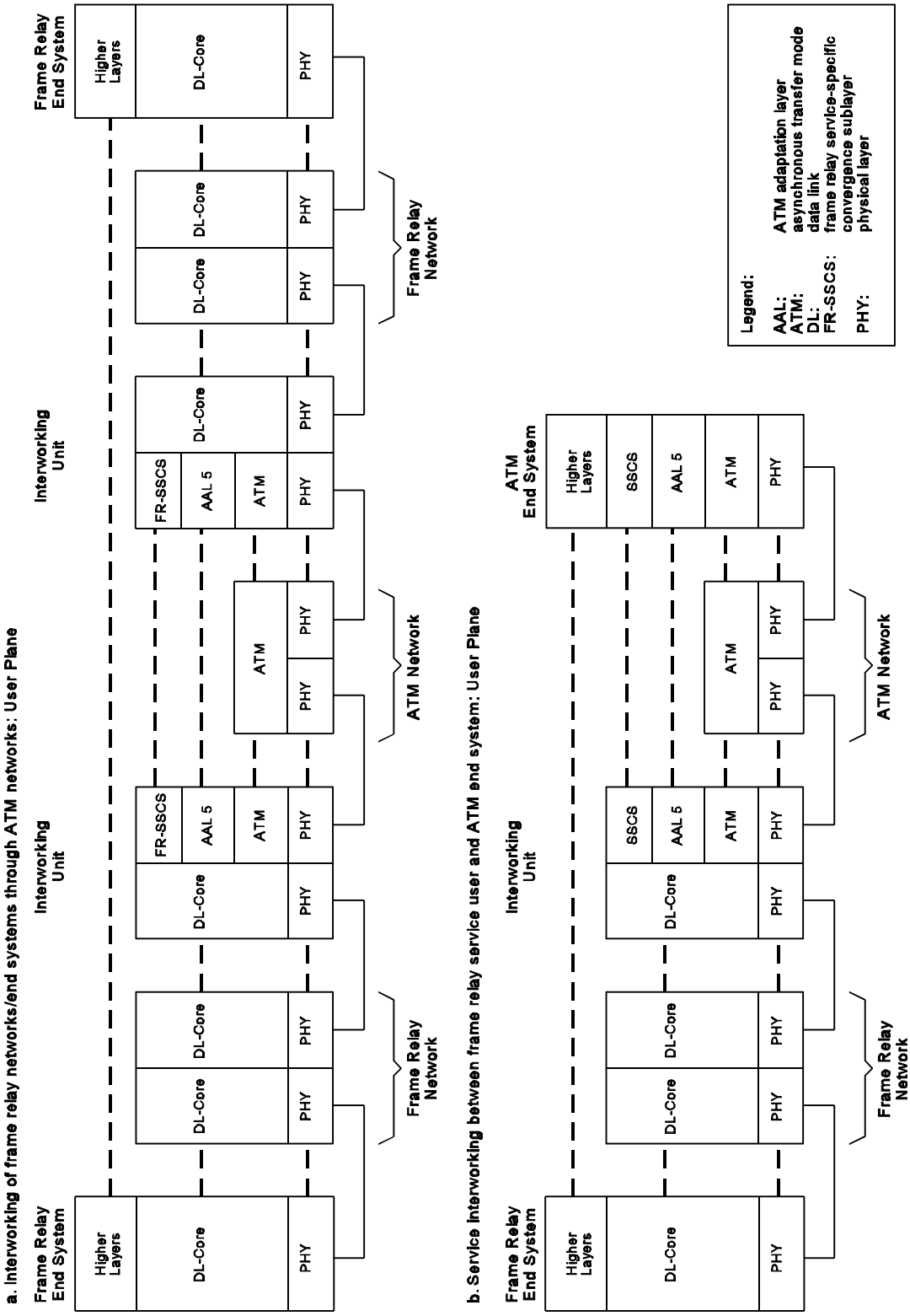

FIGURE 14. Frame Relay Interworking.

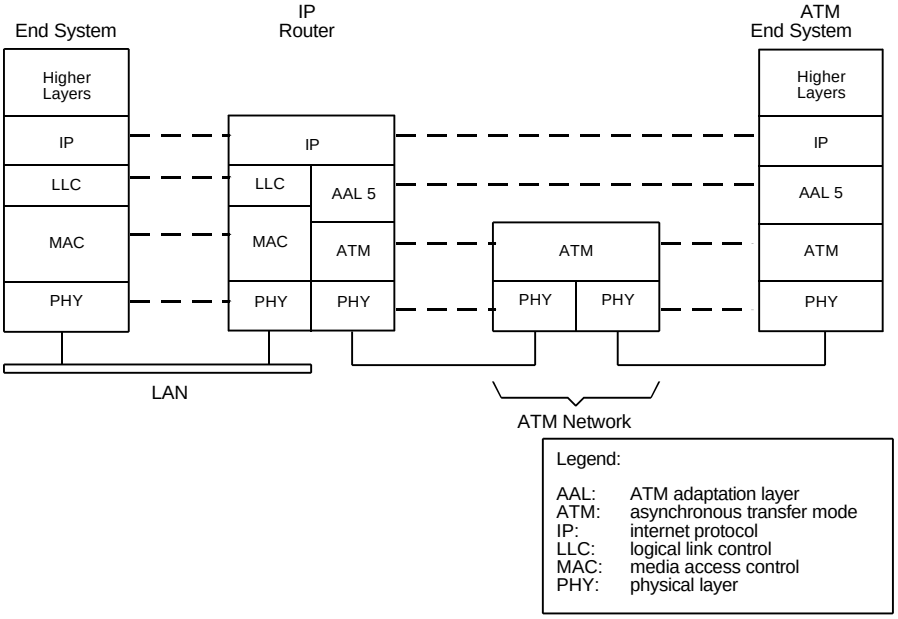

FIGURE 15. Example of IP Router Interworking: User Plane.

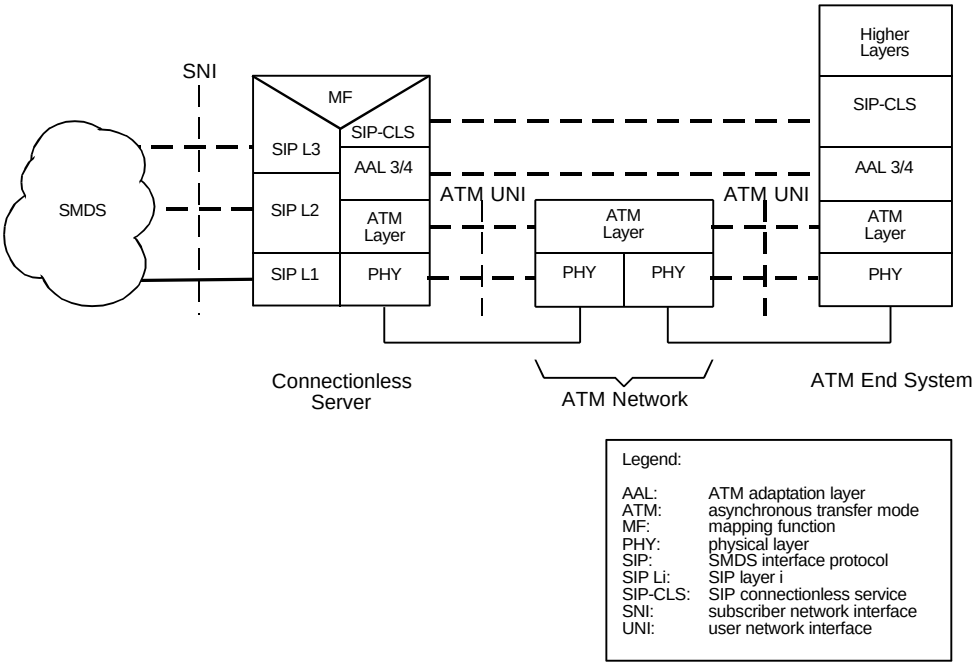

FIGURE 16. SMDS Interworking.

5.6.1 Interim local management interface . The interim local management interface (ILMI) shall comply with section 4 of the AF UNI specification. ILMI defines a pre-specified ATM connection on the UNI to communicate, using SNMP messages. The ILMI supports sharing of basic information about the connection. The ATM layer contains the F4 and F5 OAM flows, which pertain to the virtual path connections (VPC) and virtual channel connections (VCC), respectively. Both the F4 and F5 flows are bidirectional.

5.6.2 Transaction-oriented application . For transaction-oriented applications, the simple network management protocol (SNMP), as defined in RFC 1157, shall be used.

(This page intentionally left blank.)

6. NOTES

(This section contains information of a general or explanatory nature which may be helpful, but it is not mandatory.)

6.1 Key-word listing . The following key words, phrases, and acronyms apply to MIL-STD-188-176:

- ATM adaptation layer (AAL)
- ATM adapter (AA)
- ATM Forum (AF)
- constant bit rate (CBR)
- Interworking with non-ATM networks
- Synchronous Optical Network (SONET)
- telecommunications management network (TMN)
- variable bit rate (VBR)

(This page intentionally left blank.)

CONCLUDING MATERIAL

Custodians:

Army - CR

Navy - EC

Air Force - 90

Preparing Activity:

DISA (JIEO) - DC

(Project TCSS-7110)

Review Activities:

Army - SC

Navy - MC, SH, AS

Air Force - 02, 13, 17, 18, 19, 93

NSA - NS

OASD - IR

DMA - MP

DIA - DI

DLA - DH

ECAC

Civilian Agency Coordinating Activities:

NCS

(This page intentionally left blank.)

STANDARDIZATION DOCUMENT IMPROVEMENT PROPOSAL

INSTRUCTIONS

1. The preparing activity must complete blocks 1, 2, 3, and 8. In block 1, both the document number and revision letter should be given.

2. The submitter of this form must complete blocks 4, 5, 6, and 7.

3. The preparing activity must provide a reply within 30 days from receipt of the form.

NOTE: This form may not be used to request copies of documents, nor to request waivers, or clarification of requirements on current contracts. Comments submitted on this form do not constitute or imply authorization to waive any portion of the referenced document(s) or to amend contractual requirements.

I RECOMMEND A CHANGE:	1. DOCUMENT NUMBER: **MIL-STD-188-176**	2. DOCUMENT DATE (YYMMDD) **96/03/01**

3. DOCUMENT TITLE: Department of Defense Interface Standard, Standardized Profile for Asynchronous Transfer Mode (ATM)

4. NATURE OF CHANGE *(Identify paragraph number and include proposed rewrite, if possible. Attach extra sheets as needed.)*

5. REASON FOR RECOMMENDATION

6. SUBMITTER

a. NAME *(Last, First, Middle Initial)*	b. ORGANIZATION	
c. ADDRESS *(Include Zip Code)*	d. TELEPHONE *(Include Area Code)* (1) Commercial (2) DSN *(if applicable)*	7. DATE SUBMITTED (YYMMDD)

8. PREPARING ACTIVITY

a. NAME: **Joint Interoperability and Engineering Organization (JIEO)**	b. TELEPHONE *(Include Area Code)* (1) Commercial **(908) 532-7719** (2) DSN: **992-7719**
c. ADDRESS *(Include Zip Code)* **ATTN: JEBBB** **Fort Monmouth, NJ 07703-5613**	**IF YOU DO NOT RECEIVE A REPLY WITHIN 45 DAYS, CONTACT:** Defense Quality and Standardization Office 5203 Leesburg Pike, Suite 1403, Falls Church, VA 22041-3466 Telephone (703) 756-2340 DSN: 289-2340